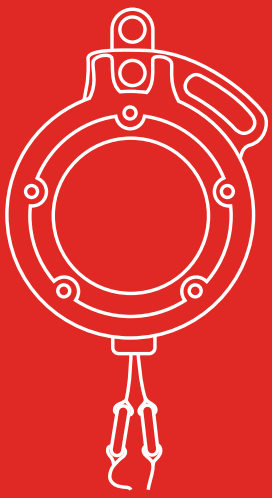

QUICKFLIGHT / QUICKFLIGHT XL FREE FALL DEVICE

Operator Manual

Models: QF150-12A / QFXL150-20A

QUICK FLIGHT

NOTE TO OWNERS, INSTALLERS, AND OPERATORS

Always Read Instructions Before Use

The Operator Manual contains information relating to the proper installation, operation, and maintenance of the QuickFlight Free Fall Device and includes all product registration and warranty information. This document must be supplied to the Owner/Operator after installation. Ensure that this Operator Manual is readily available to responsible parties at all times.

Head Rush Technologies QuickFlight Free Fall Device Manual
P/N 18310-03
Head Rush Technologies products are covered by a number of patents, including
U.S. Patents 8,490,751; 8,851,235; 9,016,435 and D654,412 & corresponding patents/applications in the USA and in other countries worldwide.

XL
QUICK FLIGHT
CAUTION
headrush
ANNUAL

TABLE OF CONTENTS

SAFETY INFORMATION	5
Safety Warnings	5
Health and Safety	6
Site Rescue Plan	6
Symbols Used in this Manual	6
Warranty Conditions	6
Owner Responsibility	7
INTRODUCTION	8
Models and Specifications	9
QuickFlight Webbing Configurations	11
Location of Specification Labels	12
Device and Webbing Diagram	13
UNPACKING	14
Receipt of the QuickFlight Free Fall Device	14
Unpacking the QuickFlight Free Fall Device	14
INSTALLATION	15
Selecting a Location	15
Location Diagram	16
Mounting	17
Mounting Diagram	18
OPERATION	19
Participant Connection Hardware	19
Operator/User Instruction	21
Proper Harness Connections	23
Proper Webbing Retraction	25
INSPECTION AND MAINTENANCE	26
Daily Inspection	26
Weekly Inspection	28
Bi-Annual Inspection	28
Annual Recertification	28
Upper Webbing Inspection	29

RipCord Webbing Inspection	34
Upper Webbing Replacement	37
Nozzle Replacement	39
Side Cover Replacement	40
RipCord Webbing Replacement	41
Long Term Storage	42
Improper Operation	42
MANUFACTURER'S DETAILS	44
Address	44
Contact Details	44

Safety Warnings

READ BEFORE INSTALLATION & OPERATION

RECREATIONAL DESCENT IS A DANGEROUS ACTIVITY.

THE QUICKFLIGHT FREE FALL DEVICE IS NOT SUITABLE FOR USE AS A BELAY DEVICE FOR CLIMBING NOR FOR USE AS PERSONAL PROTECTIVE EQUIPMENT AGAINST A FALL FROM HEIGHT. BECAUSE OF THE LARGE INITIAL FREE FALL AND THE RAPID DESCENT RATE, THIS DEVICE IS UNSAFE FOR ANY USE OTHER THAN THE INTENDED USE STATED WITHIN THIS OPERATOR MANUAL.

USE OF THE QUICKFLIGHT FREE FALL DEVICE FOR ANY PURPOSES OTHER THAN THOSE INTENDED BY THE MANUFACTURER ARE NOT PERMITTED AND MAY RESULT IN SERIOUS INJURY AND/OR DEATH.

PRIOR TO INSTALLATION AND OPERATION, ALL RESPONSIBLE PARTIES MUST HAVE READ AND SHOWN TO HAVE UNDERSTOOD ALL REQUIREMENTS, INSTRUCTIONS, LABELS, MARKINGS AND SAFETY INFORMATION PERTAINING TO THE CORRECT INSTALLATION, OPERATION, INSPECTION, AND MAINTENANCE OF THE QUICKFLIGHT FREE FALL DEVICE, ITS COMPONENT PARTS, AND ALL ASSOCIATED HARDWARE AND SYSTEMS. FAILURE TO DO SO MAY RESULT IN EQUIPMENT DAMAGE, SERIOUS INJURY, OR DEATH.

QuickFlight Free Fall Device Models QF150-12A, QFXL150-20A, and associated equipment are designed and specified for use as rapid descent devices.

Owners and Operators of the QuickFlight Free Fall Device are responsible for the safety and supervision of any person using the QuickFlight Free Fall Device and are required to ensure that proper installation, operation, and maintenance procedures are followed at all times. Proper installation requires careful design and planning using QuickFlight and non-QuickFlight components. Owners, Installers, and Operators are required by the Manufacturer to read, understand, and follow all instructions in this Operator Manual regarding the correct installation and operation of the QuickFlight Free Fall Device prior to any use. Owners and Operators are encouraged to seek the advice of their Installer or a qualified engineering professional regarding the instructions in this Manual.

These instructions must be made readily available to the Owners, Installers, and Operators of the QuickFlight Free Fall Device at all times. Prior to installation and use of the device, all Owners, Installers, and Operators must have read and shown to have understood all instructions, labels, markings, and safety information pertaining to the installation, operation, care, and maintenance of the QuickFlight Free Fall Device system, its component parts, and all associated hardware.

Health and Safety

Owners and Operators must abide by all Standards, International, Federal, State and Provincial laws, and any specific health and safety regulations pertaining to the installation and use of this product.

Site Rescue Plan

Owners and Operators must have devised an emergency rescue plan for any Participant in distress at all sites operating QuickFlight Free Fall Devices. Operators must inform Users of the QuickFlight Free Fall Device of the procedure for rescuing a Participant in distress prior to descent.

Symbols Used in this Manual

The following safety symbols are used throughout this manual to highlight potential dangers. One or more precautions may be associated with practices and procedures described within this manual. Failure to adhere to any precautions highlighted can result in death, serious injury, and equipment damage.

Ensure that the Owner/Installer/Operator reads and understands all safety procedures related to the working environment and the task they are undertaking.

Indicates a potentially hazardous situation exists that, if warnings are not observed, may result in improper operation, equipment damage, serious injury, or death.

Indicates an action that must be taken to prevent improper operations, equipment damage, serious injury, or death.

Indicates a scenario, configuration, action, etc. that is not allowed and may result in improper operation, equipment damage, serious injury, or death.

Warranty Conditions

This QuickFlight Free Fall Device is warrantied against factory defects in materials and workmanship (excluding “Replacement Parts” – see below) for a period of two (2) years from date of purchase. This warranty applies only to the original purchaser, and is contingent upon the Owner/Operator maintaining and using the device in accordance with Manufacturer’s instructions, including the requirement to continue to maintain annual re-certification as described in the Operator’s Instruction Manual. This Warranty is in lieu of all other warran-

ties, express or implied.

The sole remedy for breach of this warranty, or for any claim in negligence or strict liability in tort, is the repair or replacement of any defective parts by Head Rush Technologies. Upon notice in writing, Head Rush Technologies will promptly repair or replace all defective items. Head Rush Technologies reserves the right to have any defective equipment returned to its plant, transportation pre-paid, for inspection before making a repair or replacement.

This Warranty is null and void if parts other than genuine parts are used, or if any modifications or services have been performed on the device by anyone other than an authorized Head Rush Technologies servicing agent. This warranty does not cover any damages resulting from abuse to the device, damage in transit, or any other damage beyond the control of Head Rush Technologies. Head Rush Technologies makes no warranties in respect to trade accessories or component parts which are not made by Head Rush Technologies. Head Rush Technologies expressly excludes from this Warranty the replacement of "Replacement Parts".

No person, agent or Distributor is authorized to give any warranty, other than the one herein expressed, on behalf of Head Rush Technologies, or to assume for it any liability pertaining to such products. Head Rush Technologies expressly disclaims any implied guarantee of merchantability, or claim as to whether the device is suited for a particular purpose. Purchaser agrees that Head Rush Technologies shall not be held liable to Purchaser/Operator for damages of any kind, including but not limited to, lost or projected profits, equipment down time, or any losses considered to be caused by non-operation or servicing/re-certification down time of the equipment.

Owner Responsibility

The following items are considered to be the responsibility of the Owner/Operator and are therefore not reimbursable under the terms of the warranty.

- Routine maintenance and inspection.
- Normal replacement of service items.
- Replacements required because of abuse, misuse or improper operational habits of the Operator.
- Wearing parts such as nozzle, webbing lines, RipCord webbings, carabiners, attachment rings, side covers, and lanyard keepers.
- Normal deterioration due to use and exposure.

This warranty is subject to the following of the requirements of the Operator Manual supplied, Manufacturer's instructions, and the advice given by Head Rush Technologies service technicians.

THE FIGURES PRESENTED IN THIS MANUAL ARE NOT TO SCALE AND MAY NOT SHOW ALL REQUIRED COMPONENTS OR STRUCTURES, INCLUDING, BUT NOT LIMITED TO: MOUNTING POINTS, CONNECTORS, SAFETY EQUIPMENT, ETC.

The QuickFlight Free Fall Device is a descent device designed specifically for use as a component within a free fall system. The design of the QuickFlight Free Fall Device permits simple installation and removal and incorporates an advanced self-regulating brake system and automatic webbing line retraction. The patented braking mechanism offers Participants an initial free fall followed by a consistent descent with a minimal variation in descent rate of both children and adults.

Two models are available:

- QF150-12A QuickFlight Free Fall Device
- QFXL150-20A QuickFlight XL Free Fall Device

The QuickFlight Free Fall Device offers a standard free fall experience and may be mounted at a low height range. The QuickFlight XL Free Fall Device provides an extended free fall experience but must be mounted at a higher height range.

All QuickFlight Free Fall Devices use a unique dual webbing line configuration for added redundancy and lower cost of ownership. This webbing configuration uses two Upper Webbing lines that extend into and out of the Device and connect to a mandatory RipCord Lower Webbing. The RipCord also includes an Overload Protection Assembly (OPA) that provides additional safety in the event that the device ever stops functioning on descent.

Upper webbings are available in three lengths: Low Mount, Standard, and XL. The device should never be used with un-matched Upper Webbing lengths. Two RipCord variants are available: the 1m RipCord for a standard free fall experience or the 2m RipCord for an extended free fall experience. As with the Device and Upper Webbing selections, the RipCord length influences the required installation height. Refer to the full specifications based on your Device model, Upper Webbing length, and RipCord length for proper installation details.

To protect the longevity of the QuickFlight Free Fall Device, installation, care and use of the QuickFlight Free Fall Device must be carried out in accordance with the instructions in this manual. It is the responsibility of the Installer/Operator to ensure that an allowable webbing configuration is used in the device, and to always mount the QuickFlight Free Fall Device within the stated mounting height limits for the Upper Webbing, Lower Webbing, and Device combination used.

Models and Specifications

Every QuickFlight Free Fall Device comes with two Upper Webbings and a Rip-Cord assembly pre-installed. The Owner should keep the original packaging to use for storage and shipping of the device.

All QuickFlight Models

DIMENSIONS	0.43 x 0.33 x 0.25 m (17 x 13 x 10 in)	
DISTANCE NOZZLE TO PRIMARY MOUNTING POINT	0.405 m (15.94 in)	
NET WEIGHT	25 kg (55 lbs)	
MATERIALS	CASING	Aluminum Alloy
	INTERNAL PARTS	Zinc Plated Steel Stainless Steel
	NOZZLE	Modified Acetal plastic
	NOZZLE INSERT	304 Stainless Steel
	WEBBING LINE	Polyamide/Ultra High Molecular Weight Poly-ethylene
MINIMUM DISTANCE NOZZLE TO PLATFORM	1.75 m (5.7 ft)	
MAXIMUM DISTANCE NOZZLE TO PLATFORM	2.50 m (8.2 ft)	
MIN. PARTICIPANT WEIGHT	20 kg (44 lbs)	
MAX. PARTICIPANT WEIGHT	130 kg (285 lbs)	
MIN. OPERATING TEMPERATURE	-10° C (14° F)	
MAX. OPERATING TEMPERATURE	40° C (104° F)	
MIN. STORED TEMPERATURE	-20° C (-4° F)	
MAX. STORED TEMPERATURE	60° C (140° F)	

METRIC UNITS ARE THE CONTROLLING UNITS OF MEASURE IN THIS MANUAL. IMPERIAL UNITS ARE PROVIDED AS A COURTESY AND HAVE BEEN ROUNDED. IF THE OWNER/OPERATOR/INSTALLER MUST MAKE ANY UNIT CONVERSIONS, THE METRIC UNITS SHOULD BE REFERENCED.

QuickFlight Standard Free Fall Device, QF150-12A

LOW MOUNT UPPER WEBBINGS & 1 M RIPCORD	
MINIMUM MOUNTING HEIGHT*	6.0 m (19.7 ft)
MAXIMUM MOUNTING HEIGHT*	8.3 m (27.2 ft)
12.5 M UPPER WEBBINGS & 1 M RIPCORD	
MINIMUM MOUNTING HEIGHT*	8.0 m (26.3 ft)
MAXIMUM MOUNTING HEIGHT*	14.3 m (46.9 ft)
12.5 M UPPER WEBBINGS & 2 M RIPCORD	
MINIMUM MOUNTING HEIGHT*	9.0 m (29.6 ft)
MAXIMUM MOUNTING HEIGHT*	15.3 m (50.1 ft)

QuickFlight XL Free Fall Device, QFXL150-20A

20 M UPPER WEBBINGS & 1 M RIPCORD	
MINIMUM MOUNTING HEIGHT*	12.0 m (39.4 ft)
MAXIMUM MOUNTING HEIGHT*	21.8 m (71.5 ft)
20 M UPPER WEBBINGS & 2 M RIPCORD	
MINIMUM MOUNTING HEIGHT*	13.0 m (42.7 ft)
MAXIMUM MOUNTING HEIGHT*	23.0 m (75.4 ft)

***** *Mounting heights are from nozzle to landing zone and may vary with the addition of authorized QuickFlight accessories.*

QuickFlight Webding Configurations

		1M RIPCORD	2M RIPCORD
QUICKFLIGHT	LOW MOUNT		
	STANDARD		
QUICKFLIGT XL			

THE QUICKFLIGHT FREE FALL DEVICE WITH LOW MOUNT UPPER WEBBINGS MAY NOT BE USED WITH THE 2M RIPCORD. ENSURE THAT AN ALLOWABLE COMBINATION OF DEVICE, UPPER WEBBINGS, RIPCORD WEBBINGS, AND MOUNTING HEIGHT IS IN PLACE BEFORE LIVE OPERATION OF THE QUICKFLIGHT FREE FALL DEVICE.

Location of Specification Labels

INFORMATION LABEL

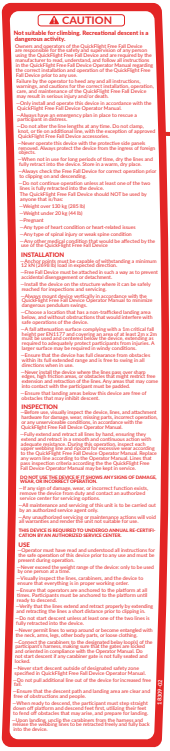

SERIAL LABEL
QF150-12A SN QF00000
QFXL150-20A SN QFXL00000

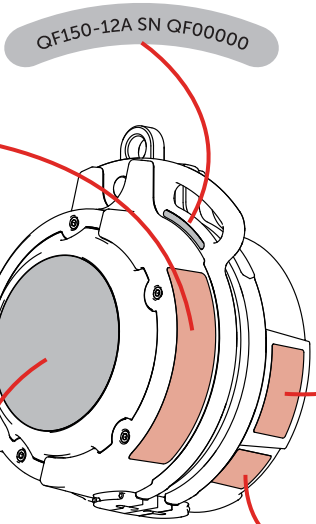

SPECIFICATION LABEL (VARIES BY MODEL)

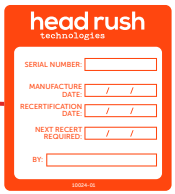

CERTIFICATION LABEL

COVER LABEL (BOTH SIDES, VARIES BY MODEL)

Device and Webbing Diagram

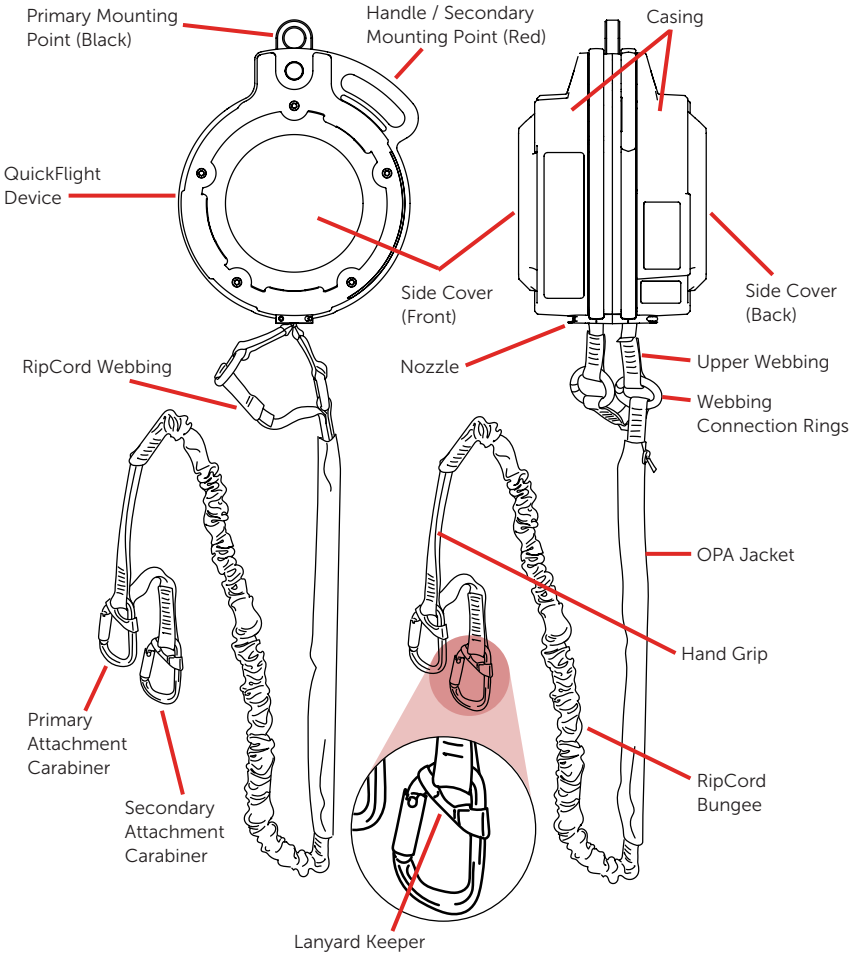

Receipt of the QuickFlight Free Fall Device

The QuickFlight Free Fall Device is packaged in a recycled cardboard box and contains:

- 1 x QuickFlight Free Fall Device with Upper Webbings Installed (model and Upper Webbings will vary depending on the specifics of your order)
- 1 x RipCord Assembly (length will vary depending on the specifics of your order)
- 2 x Webbing Connection Rings
- 2 x Carabiners
- 2 x Lanyard Keepers (Installed on Carabiners)
- 1 x Operator Manual

The QuickFlight Free Fall Device is shipped with the webbing lines and carabiners attached and does not require any further assembly.

Unpacking the QuickFlight Free Fall Device

To unpack the QuickFlight Free Fall Device:

1. Upon receipt of QuickFlight Free Fall Device, inspect for signs of shipping damage or contamination. If QuickFlight Free Fall Device shows any signs of damage or mishandling, contact your Head Rush Technologies distributor.
2. Check that all labels shown in this manual are properly affixed to the QuickFlight Free Fall Device and are legible.
3. Check the Certification Label for the 'Next Recertification Required' date. If the date shown has passed or the label is missing or illegible the QuickFlight Free Fall Device must not be put into service.
4. Register your QuickFlight Free Fall Device online at www.headrushtech.com/registration
5. Read the Operator Manual and familiarize yourself with all aspects of installation, operation, care and maintenance.

THE QUICKFLIGHT DEVICE IS HEAVY. USE CARE WHEN LIFTING! DROPPING OR HARD IMPACTS TO THE QUICKFLIGHT FREE FALL DEVICE CAN RESULT IN SERIOUS DAMAGE TO MOUNTING POINTS AND INTERNAL PARTS AND MAY COMPROMISE SAFETY OF OPERATION. IF THE QUICKFLIGHT FREE FALL DEVICE IS SUBJECTED TO A HARD IMPACT, REMOVE IT FROM DUTY AND RETURN TO AN AUTHORIZED SERVICE CENTER FOR INSPECTION.

Selecting a Location

A PROTECTIVE FALL ATTENUATION SURFACE MUST BE USED AND CENTERED BELOW THE LANDING POINT OF THE DEVICE, EXTENDING AS REQUIRED TO ADEQUATELY PROTECT PARTICIPANTS FROM INJURIES. IT IS RECOMMENDED THE SURFACE MEET ASTM F1292 SPECIFICATION FOR IMPACT ATTENUATION OF SURFACING MATERIALS FOR A CRITICAL FALL HEIGHT OF 1M (3FT). THE SURFACE MUST BE AT LEAST 2M X 2M IN SIZE. A LARGER SURFACE MAY BE REQUIRED IF THE DEVICE IS OPERATED IN WINDY CONDITIONS.

When selecting a location to install the QuickFlight Free Fall Device, check:

- Install the device where it can be safely reached for inspections and servicing.
- The QuickFlight Free Fall Device will hang vertically over the line of descent with the nozzle pointing down. Ensure that the line of descent has full clearance from obstacles and pedestrians within its fully extended range, including areas to which the Participant may swing.
- Any areas or sharp edges that may come into contact with the Participant must be padded or protected.
- The webbing must not come in contact with the structure.
- Ensure that descending on the device cannot cause the Participant to experience dangerous pendulum swings into adjacent obstacles, even in windy conditions.
- A minimum distance of 1 m (3 ft) must be maintained between the QuickFlight Free Fall Device and any adjacent structure.
- When device is mounted, the distance between the nozzle height and platform height must be between 1.75 m (5.7 ft) and 2.50 m (8.2 ft).
- The QuickFlight Free Fall Device may be installed outdoors. There is a higher risk of internal corrosion and degradation of the webbing line if the QuickFlight Free Fall Device is installed in wet or agressive environments and is not protected from the direct ingress of water or foreign objects. Additional or more frequent inspections may be necessary.

Location Diagram

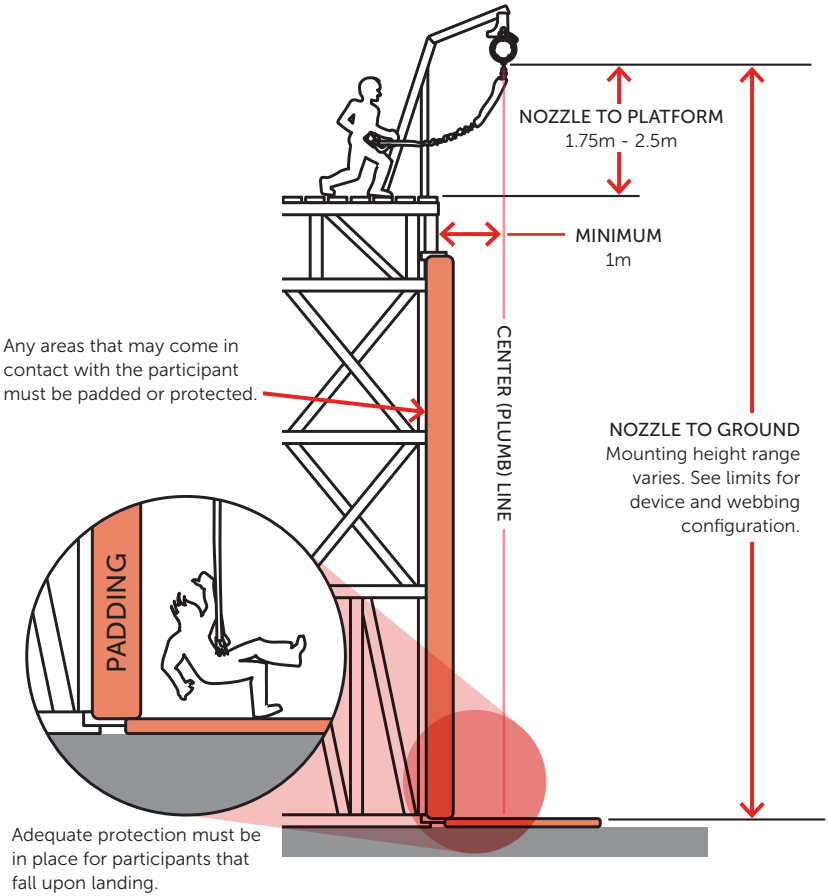

Mounting

With a suitable location for the QuickFlight Free Fall Device selected the device must be mounted only using the methods and hardware described in this manual. When mounting the QuickFlight Free Fall Device, be aware of the following precautions:

DEVICE MOUNTING POINTS

USE ONLY THE DESIGNATED MOUNTING POINTS FOR MOUNTING. ENSURE ALL MOUNTING HARDWARE IS SECURE BUT FREE TO PIVOT IN MOUNTING POINT.

The QuickFlight Free Fall Device provides color-coded mounting points to ensure that it hangs centrally and vertically with the webbing line nozzle pointing down. The black Primary Mounting Point should be used to hold the weight of the device and all associated forces. The red Secondary Mounting Point should be connected for redundancy using hardware that can withstand all associated forces, but with no tension during normal operation. For optimal webbing life, it is important to mount the device in a way that loads the Primary Mounting Point without actively loading the Secondary Mounting Point.

ANCHOR POINTS

At least two anchor points must be used to mount the QuickFlight Free Fall Device. Do not attach Primary and Secondary Mounting Points to the same anchor point. All anchor points used with the QuickFlight Free Fall Device must conform to any local, regional, federal and state requirements for such devices.

Minimum requirements for anchor points must conform to the requirements of:

- EN 12572 - Climbing wall anchor points.
- EN 795 - Anchor Devices.
- Minimum load capacity of the anchor point(s): 12 kN (2698 lbs) in expected directions of application.
- Anchor points are not to be used by other devices or as attachments for hardware not associated with the QuickFlight Free Fall Device installation.
- Anchor points should be of a suitable size and type to correctly install any mounting hardware.

MOUNTING CONNECTORS

All connectors used with the QuickFlight Free Fall Device must conform to any local, regional, federal and state requirements for such devices.

All connectors used to mount the QuickFlight Free Fall Device to Anchor

Points must meet a minimum breaking load of 12kN (2698 lbs) and be of compatible size, shape and strength for the points to which they are attached. Each individual component must be marked with its load rating.

Mounting Diagram

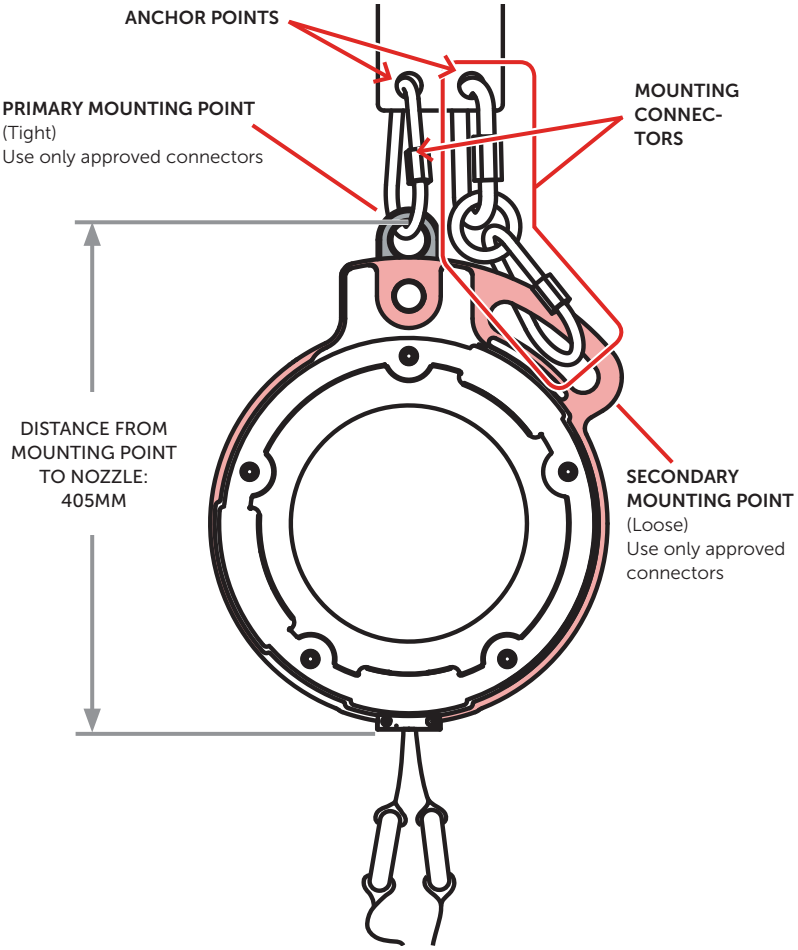

REMOVE QUICKFLIGHT FREE FALL DEVICE FROM SERVICE IMMEDIATELY IF THERE IS ANY CONCERN OVER ITS CORRECT OPERATION OR PARTICIPANT SAFETY. DO NOT RETURN QUICKFLIGHT FREE FALL DEVICE TO SERVICE UNTIL IT HAS BEEN INSPECTED AND COMPLETED A RECERTIFICATION INSPECTION AND TEST BY AN APPROVED HEAD RUSH TECHNOLOGIES SERVICE AGENT

Owners and Operators of the QuickFlight Free Fall Device are responsible for the safety and supervision of any person using this equipment and are required by the manufacturer to read, understand and follow all instructions in this Operator Manual regarding the correct installation and operation of the QuickFlight Free Fall Device prior to any use.

Participant Connection Hardware

HARNESSES

ONLY A FULL BODY HARNESS MEETING THE STANDARDS SHOWN MAY BE USED WITH THE QUICKFLIGHT FREE FALL DEVICE. USE OF OTHER HARNESSES MAY RESULT IN SERIOUS INJURY OR DEATH. SIT OR WAIST HARNESSES ARE NOT ALLOWED.

All harnesses used in conjunction with the QuickFlight Free Fall Device must comply with one or more of the following standards or an equivalent standard for your jurisdiction:

- EN 361 - Personal protective equipment for prevention of falls from a height – Full body harness
- EN 12277 - Type A. Full Body Harness
- EN 12277 - Type B. Small Full Body Harness

Harnesses must be of the correct size and fitment and be in serviceable condition.

CONNECTORS

IT IS THE OWNER/INSTALLER'S RESPONSIBILITY TO ENSURE COMPATIBILITY OF CONNECTORS IN DEVELOPING THE HARNESS/CONNECTION SAFETY SYSTEM. INCOMPATIBLE CONNECTIONS CAN RESULT IN SERIOUS INJURY OR DEATH DUE TO UNINTENTIONAL DISCONNECTION DURING FREE FALL/DESCENT.

Two EN 362 certified triple locking carabiners are installed on the primary and secondary attachment points of the RipCord assembly for Participant connection. Two plastic Lanyard Keepers prevent the carabiners from rotating within their attachment points. Two EN 362 certified attachment rings are installed to connect the RipCord to the two Upper Webbings. The carabiners, lanyard keepers, and webbing connection rings must be checked and be in service-

able condition according to the Manufacturer's instructions before any use. Ensure the carabiners are only loaded along the vertical direction (i.e. not cross loaded).

The carabiners can be replaced with other EN 362 certified connectors at the Owner/Installer/Operator's discretion with the following requirements:

- If a continuous or smart belay system (or any other system) lengthens the distance between the Participant and the attachment points of the RipCord, the minimum Nozzle to Platform distance must be increased by the amount the connection is lengthened. The maximum Nozzle to Platform distance may be increased by the same amount.
- The Participant must remain connected to both the Primary and Secondary attachment points of the RipCord.
- Any connector utilized must be suitably rated and meet the requirements of any applicable international, federal, state or provincial standards for its application.
- When connections are made using carabiners, only triple locking carabiners with a lanyard retaining feature are to be used. Head Rush Technologies recommends the use of the Petzl Am'D carabiner with Captiv lanyard keeper.
- Connections to the QuickFlight and QuickFlight XL webbing assembly have the potential for additional wear and must be included in daily webbing inspections.

CARABINER OPERATION

If not using the carabiners supplied with the QuickFlight Free Fall Device, refer to the appropriate connector's User Instructions.

The supplied carabiners use a triple-action gate and are opened by sliding the gate's collar, rotating the gate's collar, and then pushing the gate toward the center of the carabiner.

The carabiners are closed by releasing the gate and allowing it to snap shut, ensuring the collars have rotated back and slid back to their fully locked position. Ensure that no clothing, webbing, incompatibly shaped D-rings, or other objects are obstructing the gate or its latching function.

Step 1 – Slide

Step 2 - Twist

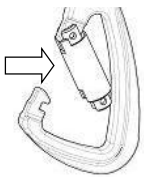

Step 3 – Depress

Step 4 – Release

Operator/User Instruction

THE QUICKFLIGHT FREE FALL DEVICE SHOULD NOT BE USED BY ANYONE THAT IS/HAS:

- WEIGHT OVER 130KG (285LBS)
- WEIGHT UNDER 20KG (44LBS)
- PREGNANT
- ANY TYPE OF HEART CONDITION OR HEART-RELATED ISSUES
- ANY TYPE OF SPINAL INJURY OR WEAK SPINE CONDITION
- A WEAK PHYSICAL CONSTITUTION OR POOR PHYSICAL CONDITIONING

ANY PARTICIPANT THAT HAS A PHYSICAL OR MEDICAL CONDITION THAT MAY AFFECT THEIR ABILITY TO DESCEND MUST CONSULT A MEDICAL PROFESSIONAL PRIOR TO PARTICIPATION.

THE QUICKFLIGHT FREE FALL DEVICE IS ONLY TO BE USED BY ONE PERSON AT A TIME.

Prior to clipping in, all Participants must be instructed in the proper and correct use of the QuickFlight Free Fall Device. Operators are to ensure all Participants are familiar with the site rescue plan in the event the Participant becomes distressed.

Prior to descent, the Participant and Operator must be aware of, completely understand, and obey the following precautions:

- Ensure that the daily device inspection has been performed and that the webbing line, carabiners, and device have not been damaged.
- Use a helmet if determined necessary by a qualified person.
- Do not allow Participants to descend with sharp objects (i.e. keys) in pockets.
- Ensure that Operators are anchored to the platform at all times. Participants must be anchored to the platform **AND** attached to the QuickFlight **UNTIL THEY ARE READY** to descend.
- Never push a reluctant Participant as this can create imbalance and improper orientation during free fall.
- Never continue operation if the webbing lines fail to fully retract. The webbing lines are considered to be fully retracted when at least one colored webbing end is touching the webbing nozzle and the other colored webbing end is less than 0.3m (1 ft) from the webbing nozzle. DO NOT pull out any excess webbing line prior to descent. The webbing line must be fully retracted or under tension prior to operation.
- Check the harness is correctly fitted and tightened.
- Check that the carabiners from the QuickFlight Free Fall Device line are

connected to fall arrest attachment point(s) on the Participant harness as designated by the harness manufacturer, and that the gates are properly closed.

- Pay attention to the difference in locations of the primary and secondary carabiners when making harness connections! The primary carabiner is on the shorter attachment of the RipCord Webbing and should transmit all loading under normal operation. The secondary carabiner is on the longer attachment of the RIpCord Webbing and should remain slack through normal operation.
- If both the primary and secondary carabiners are attached to the same harness attachment point, the carabiner gates should face opposite and opposed. Head Rush Technologies recommends that the primary carabiner latch gate faces outward away from the Participant and the secondary carabiner latch gate faces inward toward the Participant when the webbing is tensioned, when specific harness connection points allow.
- If the primary and secondary carabiners are attached to different harness attachment points, the carabiner latch gates should both face outward from the Participant when the webbing is tensioned.
- Attach the primary carabiner and the secondary carabiner onto the harness attachment points in a way that does not load the secondary carabiner during normal operation.
- Never pass the attachment points of the RipCord Webbing through any loops on the harness.
- Attach both carabiners to either the front attachment points or the rear attachment points of a harness. Never attach the carabiners on both the front and back of the harness, and never attach the carabiners to the side of the harness.
- Keep fingers clear of carabiners and harness attachment points when descending. Loading may cause pinching.
- Never permit the webbing lines to wrap around the legs, arms, neck, other body parts or loose clothing of the Participant.
- Never descend from alongside or above the QuickFlight Free Fall Device.
- Prior to descent, ensure descent path and landing area are free of people and obstructions.
- When ready to descend, the Participant must be disconnected from any platform anchor, and must step straight down off the platform.

NEVER DESCEND WITHOUT BEING CORRECTLY ATTACHED! ENSURE CARABINERS ARE ATTACHED TO DESIGNATED ATTACHMENT POINTS OF THE HARNESS, THE LATCHES ARE FULLY CLOSED AND THE GATES ENGAGED IMMEDIATELY BEFORE DESCENT. A GATE CHECK MUST BE PERFORMED WHERE THE GUIDE APPLIES PRESSURE TO THE GATE OF THE CARABINER TO ENSURE THAT IT IS FULLY LOCKED. FAILURE TO DO SO CAN RESULT IN SERIOUS INJURY OR DEATH.

- The Participant should only hold on to the RipCord webbing by the hand grip.
- Always descend feet first and straight down using feet to fend off obstacles and prepare for landing.
- Upon landing, unclip the carabiners from the harness and allow the device to take up slack in the webbing and create tension before releasing the webbing line to be retracted freely and fully back into the QuickFlight Free Fall Device.

IF THE WEBBING LINES DO NOT RETRACT ENTIRELY INTO THE DEVICE, FULLY EXTEND BOTH WEBBING LINES AND ALLOW THEM TO SLOWLY RETRACT WHILE MAINTAINING CONSTANT TENSION. DO NOT ATTEMPT TO PUSH WEBBING BACK INTO THE NOZZLE DURING RETRACTION. IF THE WEBBING CONTINUALLY FAILS TO RETRACT, CONTACT AN AUTHORIZED SERVICE CENTER FOR REPAIR.

- The Operator should monitor the arrival speed of the Participants. If the QuickFlight casing becomes hot to the touch and Participants are observed to be arriving at the fall attenuation surface faster than normal, cease operation and allow the QuickFlight to cool down.
- Do not store wet webbing in the device. If webbing becomes wet, extend the lines and allow them to dry fully. Do not speed drying with heat.

Proper Harness Connections

WAIST CONNECTION

Primary carabiner on waist attachment with gate facing away from participant.

Secondary carabiner on waist attachment with gate opposite primary carabiner.

CHEST AND WAIST CONNECTION

Both carabiners on separate attachment points with gate facing away from participant. Primary carabiner connected lower than secondary carabiner.

DORSAL CONNECTION

Primary carabiner on dorsal attachment with gate facing away from participant.

Secondary carabiner on dorsal attachment with gate opposite primary carabiner.

Proper Webbing Retraction

INCORRECT

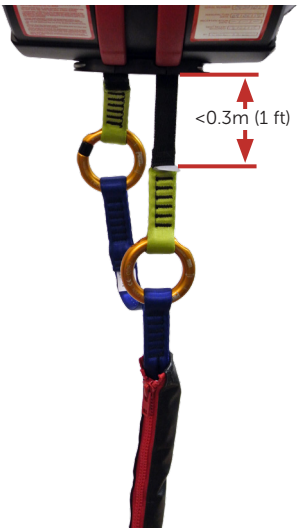

CORRECT

DO NOT ATTEMPT TO ASSIST THE RETRACTION OF THE WEBBING FOR ANY REASON. DOING SO COULD LEAD TO A DANGEROUS BINDING OF THE WEBBING WHICH CAN ABRUPTLY SHORTEN THE LIFE OF THE WEBBING.

ALL QUICKFLIGHT FREE FALL DEVICES MUST BE INSPECTED AND MAINTAINED IN ACCORDANCE WITH THIS MANUAL. FAILURE TO PERFORM SCHEDULED MAINTENANCE AND INSPECTIONS ON THE QUICKFLIGHT FREE FALL DEVICE MAY RESULT IN SERIOUS INJURY OR DEATH. DO NOT ATTEMPT TO CARRY OUT ANY MAINTENANCE, REPAIR, OR SERVICE ACTIONS NOT DETAILED IN THE USER MANUAL. ANY UNAUTHORIZED MAINTENANCE, REPAIR, OR MODIFICATIONS TO THE QUICKFLIGHT FREE FALL DEVICE WILL COMPROMISE SAFETY, RENDER THE DEVICE NOT FIT FOR USE, AND VOID THE WARRANTY.

Always use genuine Head Rush replacement parts; any modifications without the expressed written consent of Head Rush Technologies are not allowed. Third party components should be inspected and serviced in accordance with that manufacturer's instructions. Supplemental instructions, demonstration videos, and inspection logs are available at headrushtech.com.

Daily Inspection

Prior to daily operations, the QuickFlight Free Fall Device and associated components must be inspected. Inspection of the QuickFlight includes, at minimum, the below items. Additional structures, systems, and equipment should be inspected in accordance with the facility's documented procedure, manufacturers' instructions, and/or other instructions from the responsible party. Records of inspection, service, and component replacement must be kept. Any component that is worn out, damaged, or does not meet inspection criteria should be replaced or sent to an Authorized Service Center for repair.

1. **Device Condition -** Visually inspect the exterior of the QuickFlight casing for damage, corrosion, loose fittings and fasteners. Verify that all safety labels are in place and legible. Verify that the side covers are in place.
2. **Device Mount -** Inspect the QuickFlight mounting points and structure anchor points for damage and ensure device and mount are suitably secured.
3. **Mounting Hardware -** Check that all hardware used to connect the QuickFlight mounting points to the structure anchor points is in operational condition, secure, and free of corrosion.
4. **Webbing Extension and Retraction -** Check that the webbing extension and retraction is smooth and maintains resistance throughout its range.
5. **Upper Webbings -** Simultaneously, fully extend both Upper Webbing lines from the QuickFlight device. Check the condition of the lines, looking for damage or discoloration. Refer to Section: Upper Webbing Inspection for replacement criteria. If worn or damaged, replace with a new Upper Webbing assembly.

6. **RipCord Webbing -** Check the condition of the RipCord Webbing including the Overload Protection Assembly, looking for damage or discoloration. Refer to Section: RipCord Webbing Inspection for procedures and replacement criteria. If worn or damaged, replace with a new RipCord Webbing assembly.
7. **RipCord Connection Hardware -** Check that the Webbing Connection Rings used to connect the QuickFlight RipCord Webbing to the QuickFlight Upper Webbings are both fully closed and tightened according to the manufacturer's instructions. Inspect the rings for damage and replace if necessary. Head Rush Technologies allows the use of the Petzl Ring Open only to connect the RipCord Webbing to the Upper Webbings.
8. **Participant Connection Hardware -** Inspect the condition of the carabiners or other applicable Participant Connection Hardware, checking for excessive wear, damage, and correct operation of the locking mechanisms. If a carabiner gate does not automatically lock, lubricate the carabiner with dry graphite or dry PTFE based lubricant only until fully operational. Do not allow lubricant to come in contact with any webbing line. If full functionality of the locking mechanism cannot be restored, replace the carabiner.

IF A CARABINER IS DAMAGED OR UNSERVICEABLE, ONLY AN EN 362 CERTIFIED TRIPLE LOCKING CARABINER WITH LANYARD KEEPER MAY BE USED AS A REPLACEMENT CARABINER. HEAD RUSH TECHNOLOGIES RECOMMENDS THE USE OF THE PETZL AM'D CARABINER WITH CAPTIV LANYARD KEEPER.

9. **Lanyard Keepers -** Inspect the Lanyard Keepers, checking that they are not cracked or damaged, and that they maintain proper positioning of each Carabiner on the ends of the RipCord Webbing. Replace damaged or non-functional Lanyard Keepers.

Inspection of Lanyard Keeper

Weekly Inspection

Once weekly, the condition of the device casing and side covers should be visually inspected for damage or corrosion. If operating in a salty or harsh environment, refer to Section: Side Cover Replacement to remove the side covers and visually inspect the internal components for corrosion. If red rust is found, the device should be immediately taken out of service and returned for recertification. White scaling is acceptable and does not require recertification. Reinstall the side covers after inspection.

Bi-Annual Inspection

Once every 6 months, the condition of the internal drum leads, shackles/ shackle pins, and nozzle assembly should be visually inspected for wear and damage. Follow the steps in Section: Webbing Replacement to access these components. Inspect the drum leads and webbing assembly terminations for damage, referring to Section: Webbing Inspection. Inspect the shackles and shackle pins for damage or deformation. Unless replacing the webbing, do not loosen or tighten either shackle pin as this will break the thread locking compound. Inspect the nozzle assembly for damage and wear of the stainless steel inserts in the area shown below as well as tight fitment within the device casing.

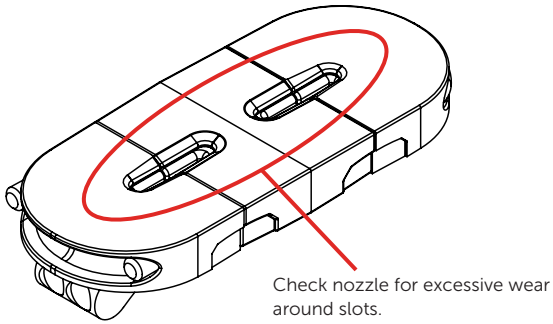

Inspection of Nozzle

Annual Recertification

OPERATION OF THE QUICKFLIGHT FREE FALL DEVICE WITHOUT A CURRENT CERTIFICATION LABEL VISIBLE WILL RENDER THE DEVICE NOT FIT FOR USE AND VOID THE WARRANTY. CONTINUED OPERATION PAST THE "NEXT RECERT REQUIRED" DATE MAY RESULT IN SERIOUS INJURY OR DEATH.

The QuickFlight Free Fall Device requires an annual service and recertification inspection to be carried out by an authorized Head Rush Technologies Autho-

rized Service Agent. The QuickFlight device should be packaged in its original protective foam and box in order to safeguard the device from damage during shipping.

The Certification expiration date is shown on the Certification Label located on the device casing. Dismount the QuickFlight Free Fall Device and return to an Authorized Service Center prior to the Next Recertification Date shown. Document the orientation and connection details prior to dismounting the device to aid reinstallation.

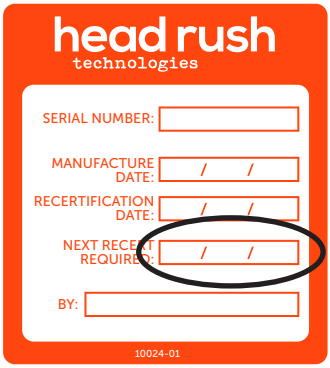

"Next Recert Required" Date Shown Here

Upper Webbing Inspection

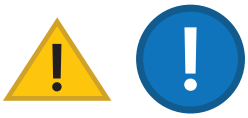

INSPECT BOTH UPPER WEBBING LINES DAILY IN ACCORDANCE WITH THE FOLLOWING INSTRUCTIONS.

The Upper Webbing lines in the QuickFlight are consumable wear components which require daily inspection and periodic replacement when they show signs of wear, damage, or contamination. More frequent inspection may be required for high throughput facilities or when operating in harsh environments. Refer to the Upper Webbing Wear Tables below for examples of acceptable and unacceptable wear of QuickFlight and QuickFlight XL Upper Webbing lines. These tables do not include all possible types of wear or damage. If in doubt, remove webbing from service. Webbing must be removed from service if it does not pass inspection. Refer to the Upper Webbing Wear Troubleshooting Table for possible causes of accelerated webbing wear. Continued use of webbing beyond stated limits may result in separation, disconnecting the Participant from the QuickFlight Free Fall Device.

To inspect the Upper Webbing lines, simultaneously extract the entire length of

both lines from the device and carefully examine both edges and faces of each webbing for wear or damage including:

- Damage to stitching
- Cuts to the face or edges
- UV degradation including discoloration, fading, brittleness, or chalking
- Hard fibers
- Surface glazing or melting appearance
- Permanent deformation or warping
- Contamination from chemicals, dirt, grit, sand, dust, etc.

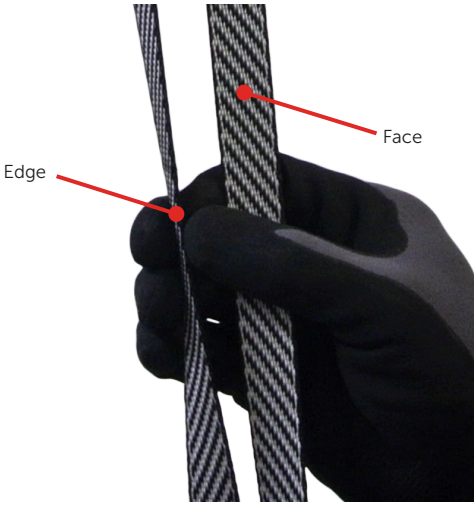

Webbing Inspection Surfaces

UPPER WEBBING WEAR TABLE - QUICKFLIGHT

Webbing pictures outlined in red in the tables below show webbing that MUST be taken out of service and replaced immediately to continue using the QuickFlight Free Fall Device. The green outlined photos show webbing that can be kept in operation.

	QuickFlight	
Degree of Wear	**Side Wear**	**Face Wear**
NEW		
STAGE 1		
STAGE 2	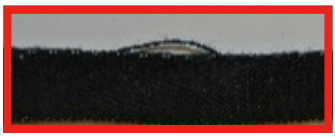	
STAGE 3		
STAGE 4		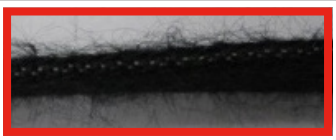

MOLDY WEBBING

Any webbing showing signs of mold should be taken out of service.

UPPER WEBBING WEAR TABLE - QUICKFLIGHT XL

Webbing pictures outlined in red in the tables below show webbing that MUST be taken out of service and replaced immediately to continue using the QuickFlight Free Fall Device. The green outlined photos show webbing that can be kept in operation.

QuickFlight XL

Degree of Wear	Side Wear	Face Wear
NEW		
STAGE 1		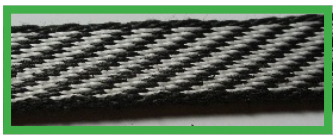
STAGE 2	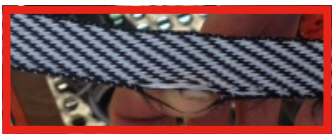	
STAGE 3		
STAGE 4		
STAGE 5	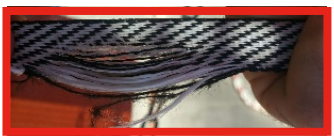	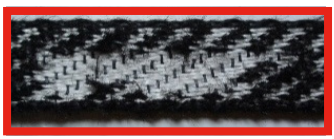

MOLDY WEBBING

Any webbing showing signs of mold should be taken out of service.

WEBBING WEAR TROUBLESHOOTING TABLE		
Symptoms	**Potential Causes**	**Potential Solutions**
WEBBING FACE WEAR **SIDE WEAR** **& LOOP FAILURE**	Participants are swinging excessively as they descend	Encourage Participants to step off the platform rather than jumping out. Participants should also jump vertically. Flailing motions (swinging arms and legs, leaning forward/back, etc.) can create more lateral movement.
	Foreign objects, including dirt and/or dust have introduced damage to nozzle stainless steel surface	Inspect nozzle for burrs and other damage. If damage is found, replace nozzle.
	QuickFlight is mounted incorrectly	Ensure that the QuickFlight is mounted according to the Operator Manual. Make sure that the QuickFlight is not angled. Always mount QuickFlight vertically with nozzle pointed down.
	Foreign objects, including dirt and/or dust have introduced damage to webbing assembly	Cover the QuickFlight when not in use. Wipe the webbing with a dry cloth daily, after use.
	Webbing is rubbing on obstruction	Move the obstruction so that it does not interfere with QuickFlight operation.
	Normal use of QuickFlight	Parts and webbing wear over time with normal operation, replace webbing as necessary.
UV FADED WEBBING	Sun is damaging webbing	Remove QuickFlight at the end of day or cover device and webbing after use.
JACKET DAMAGE	Participants are pulling down on QuickFlight jacket as they jump	Ensure that the RipCord webbing is installed with the OPA end toward the QuickFlight device. Coach Participants to hold only the hand grip of the RipCord webbing.
WEBBING IS MOLDY/ DISCOLORED	Webbing is not being dried after being used in wet conditions	Whenever using the QuickFlight in wet conditions, take the device down at the end of the day, extend the webbing in a sanitary environment, and allow webbing to dry outside of the device. Do not store in wet condition. Do not use heat to dry webbing.

RipCord Webbing Inspection

The RipCord Webbing does not wear significantly under normal operation, but requires daily inspection for damage and degradation. Webbing must be removed from service if it does not pass inspection. Continued use of webing beyond stated limits may result in separation, disconnecting the Participant from the QuickFlight Free Fall Device.

To inspect the RipCord Webbing, examine the entire length of the RipCord Webbing from Webbing Connection Rings to Carabiners and carefully examine the webbing and bar tacks for wear or damage including:

- Loose stitching or damage to stitching
- Cuts or abrasion damage to any part of the webbing assembly
- UV degradation including severe discoloration, fading, or chalking. Refer to the RipCord Webbing Degradation Table for replacement criteria due to UV degradation.
- Wear or damage to the Webbing Connection Rings or Carabiner attachment loops
- Hard fibers
- Permanent deformation or warping
- Contamination from chemicals, dirt, grit, sand, dust, etc.

The following mandatory checks must be performed each time the RipCord Webbing is inspected:

- **Bungee Integrity -** Hold the Carabiner end of the RipCord stationary and pull the bungee section tight. Check that the webbing covering the bungee section remains slack while the internal webbing is tight. If the outer webbing pulls tight, replace the RipCord.

RipCord Bungee Inspection

- **Overload Protection Assembly -** Inspect the OPA section of the RipCord Webbing, ensuring that the OPA is fully contained within the OPA Jacket. Open the OPA Jacket and inspect the internal webbing, bar

tacks, and stitching for damage. Check that the OPA Jacket is not damaged and that webbing is still clamped to the OPA Jacket and positioned so that the Jacket is centered between the bar tacks at the ends of the OPA section.

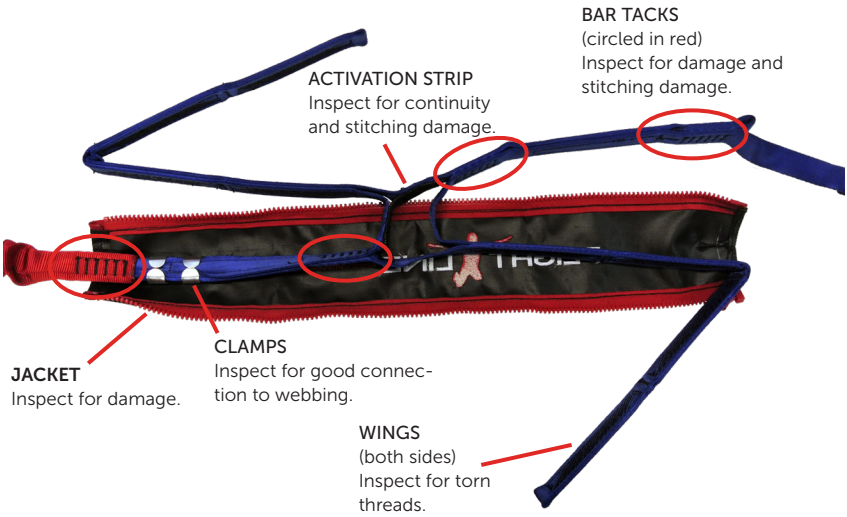

RipCord OPA Inspection

- **Activation Strip -** With the OPA Jacket open, find the Activation Strip and check it for structural integrity by pulling outward on the colored OPA webbing. Inspect the stitching for any broken threads. If broken threads are found, replace the RipCord. Reinstall the OPA into the OPA Jacket and close the zipper.

Activation Strip Inspection

RIPCORD WEBBING DEGRADATION TABLE

Webbing pictures outlined in **red** in the tables below show webbing that MUST be taken out of service and replaced immediately to continue using the QuickFlight Free Fall Device. The **green** outlined photos show webbing that can be kept in operation.

Degree of Wear	UV Damage
NEW	
STAGE 1	
STAGE 2	

Upper Webbing Replacement

Replacement of an Upper Webbing assembly may be carried out with the QuickFlight in place or removed and secured to a workbench.

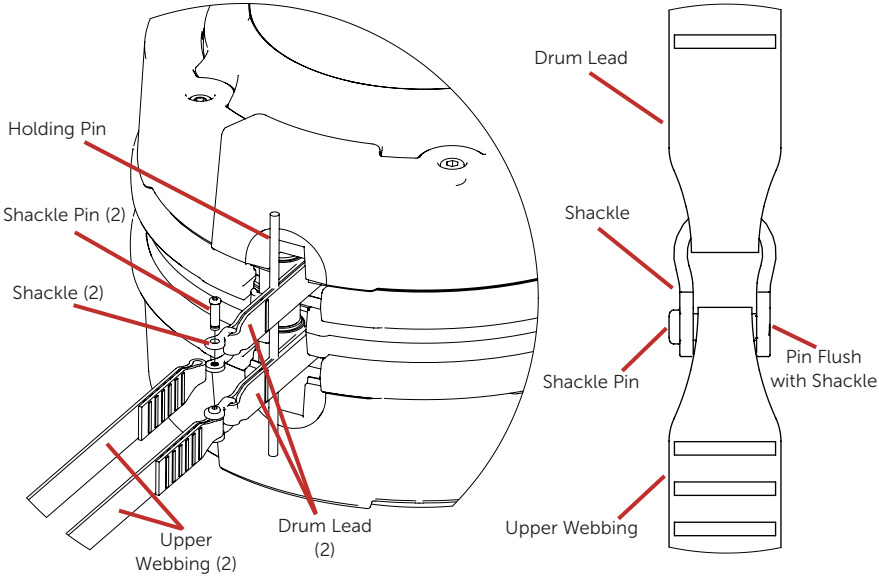

Drum Lead Diagram

To replace an Upper Webbing:

1. Disconnect the Webbing Connection Ring from the Upper Webbing being replaced.
2. Remove the nozzle assembly.
3. Simultaneously extract the entire length of both Upper Webbings including their drum leads.
4. Insert a suitable holding pin through the loops in the drum leads above the shackle. This will prevent the lines from retracting back into the device.

IF EITHER DRUM LEAD RETRACTS BACK INTO THE DEVICE, THE DEVICE WILL REQUIRE SERVICE BY AN AUTHORIZED SERVICE CENTER.

5. Unscrew the shackle pin of the webbing to be replaced and remove the webbing. Discard the old shackle pin. Cut off the ends of the used Upper Webbing before discarding to ensure it is not accidentally re-used.

ALWAYS USE A NEW SHACKLE PIN PROVIDED WITH THE WEBBING REPLACEMENT KIT. NEW SHACKLE PINS COME WITH THREAD LOCKING COMPOUND THAT CAN ONLY BE USED ONCE.

6. Install the new Upper Webbing and new Shackle Pin, ensuring the shackle loop is fitted to the drum lead and shackle pin to the end of the webbing. Ensure that the new webbing assembly is correct for the device model, mounting configuration, and RipCord configuration.
7. Tighten the shackle pin until fully seated.
8. Remove the holding pin and allow the Upper Webbing lines to slowly retract without twisting until the drum leads and sewn webbing ends are inside the device.

TWISTED WEBBING WITHIN THE DEVICE MAY CAUSE THE NOZZLE ASSEMBLY TO DISCONNECT FROM THE DEVICE CASING, LEADING TO SUDDEN AND EXTREME WEBBING WEAR, WEBBING SEPARATION, SERIOUS INJURY, OR DEATH.

9. Replace the nozzle assembly.
10. Allow the webbing lines to slowly retract into the device without twisting while maintaining constant tension. Ensure the retraction force is smooth and adequate resistance is felt.
11. Once the webbing lines are fully retracted, pull hard on both lines at once, extracting a short length (~1m) of webbing. Repeat up to three times to ensure that the dual webbings are equally stretched and tightly wound onto the drum.
12. Ensure that one Upper Webbing is fully retracted and that the other Upper Webbing is no more than 0.3m (1 ft) extracted from the nozzle.
13. Connect the colored end of the Upper Webbing to the Webbing Connection Ring that was previously disconnected, following the manufacturer's instructions to ensure that the Connection Ring is properly closed. Ensure that there are no twists between the RipCord Webbing and the Upper Webbings.
14. If necessary, reinstall the QuickFlight to its properly mounted position.

Nozzle Replacement

The nozzle assembly is located on the QuickFlight device casing and provides guidance for the dual Upper Webbings during extraction/retraction. the nozzle assembly is a wear component and will need to be inspected regularly; replacement is on a conditional basis. Service of the nozzle assembly may be carried out with the QuickFlight in place or removed and secured to a workbench.

To remove the nozzle assembly:

1. Secure or hold the webbing lines to prevent them from retracting into the device when the nozzle is removed.
2. Extract the U-shaped nozzle pin using a flat head screwdriver or comparable tool.
3. Remove the three nozzle pieces.
4. To re-install the nozzle assembly, reverse the above steps, ensuring that the webbing lines do not become twisted.

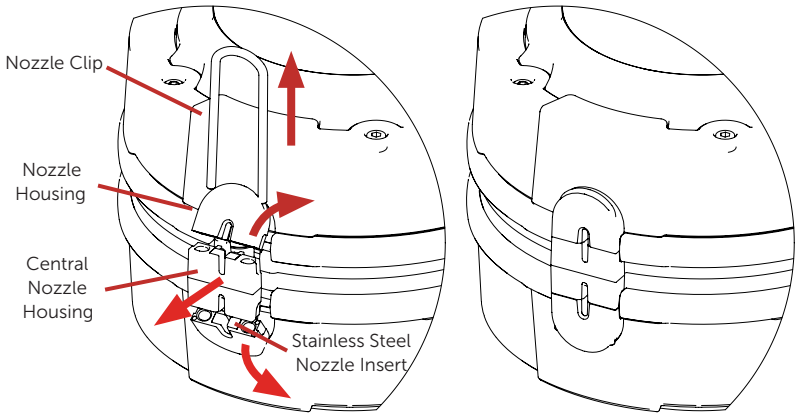

Nozzle Replacement Diagram (Webbing not shown)

DO NOT OPERATE THE QUICKFLIGHT FREE FALL DEVICE WITHOUT THE NOZZLE ASSEMBLY PROPERLY INSTALLED.

NOZZLES ARE WEBBING SPECIFIC. QUICKFLIGHT DOES NOT USE THE SAME NOZZLE AS THE QUICKFLIGHT XL. USE THE APPROPRIATE NOZZLE FOR YOUR SPECIFIC MODEL. INCORRECTLY USING A QUICKFLIGHT NOZZLE WITH A QUICKFLIGHT XL CAN RESULT IN ACCELERATED WEBBING WEAR. IF NOZZLE REQUIRES REPLACEMENT ALWAYS REPLACE AS A MATCHED THREE-PART SET – DO NOT MIX WORN AND NEW NOZZLE PIECES.

Side Cover Replacement

The QuickFlight Free Fall Device side covers are removable and simply snap into place on the device casing. Remove side covers by placing a flat head screwdriver under the edge of the cover and carefully levering it up. To replace, align the outer profile of the side cover with the profile of the casing and snap into place.

DO NOT OPERATE THE QUICKFLIGHT FREE FALL DEVICE WITH SIDE COVERS REMOVED.

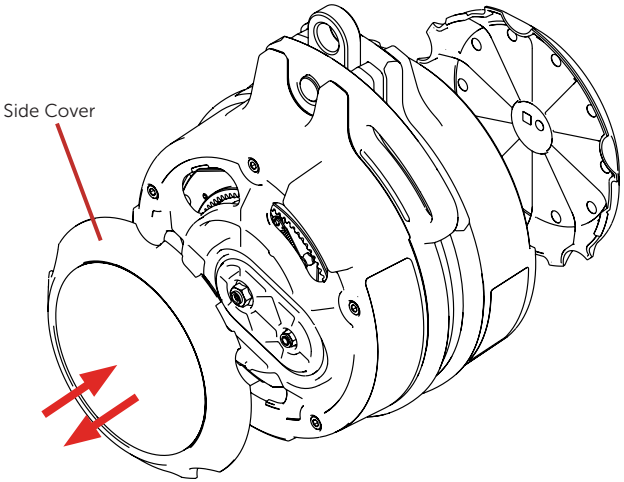

Side Cover Replacement Diagram

RipCord Webbing Replacement

Replacement of a RipCord Webbing assembly may be carried out with the QuickFlight in place or removed and secured to a workbench.

To replace a RipCord Webbing:

1. Disconnect both Webbing Connection Rings from their respective Upper Webbings.
2. Cut the connection points off of the RipCord Webbing to ensure it is not accidentally re-used.
3. Discard the RipCord Webbing and all associated Webbing Connection Rings, Carabiners, and other connectors unless the manufacturer's instructions allow for longer-term use.

ALUMINUM CARABINERS AND RINGS HAVE A LIMITED LIFESPAN AND SHOULD BE RETIRED FROM SERVICE WHEN THE RIPCORD WEBBING IS REPLACED.

---

4. Open the Webbing Connection Rings on the new RipCord Webbing.
5. Connect the Webbing Connection Rings so that they each join one RipCord attachment point to one Upper Webbing attachment point. Ensure that the OPA end of the RipCord Webbing is attached to the Upper Webbings, and that the hand grip and carabiners are positioned away from the device.
6. Close the Webbing Connection Rings on the new RipCord according to the Manufacturer's instructions.

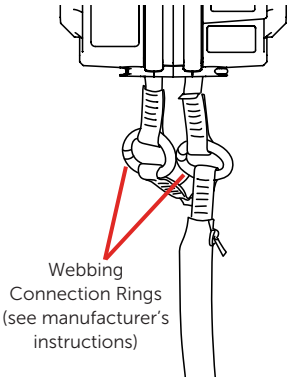

Webbing Connection Ring Diagram

Long Term Storage

If the QuickFlight Free Fall Device is to be placed into storage or left unused for longer than two weeks, ensure the device and all webbing components are clean and dry and protected from the environment. Ensure the Upper Webbings are fully retracted into the device. Always store in a clean, cool, and dry environment, preferably in the original packaging. Upon re-installation of the device, perform the Daily, Weekly, and Bi-Annual Inspections if appropriate.

After exposure to water or damp conditions, thoroughly clean and dry the QuickFlight prior to storage. Ensure that the QuickFlight is not left with a wet webbing inside the casing as this may result in corrosion of the device and deterioration of the webbing. To dry the webbing / device, remove the side covers and fully extend the wet webbing assembly and allow to completely dry in a clean environment prior to storing the device. Ensure that debris does not enter the device when side covers are removed. Re-install the side covers prior to storing or using the device.

DO NOT STORE THE QUICKFLIGHT, UPPER WEBBINGS, RIPCORD WEBBING, OR ASSOCIATED COMPONENTS IN A WET CONDITION. STORAGE MUST BE IN A CLEAN, COOL, AND DRY ENVIRONMENT IN ACCORDANCE WITH THESE INSTRUCTIONS.

NEVER USE HEAT TO DRY THE WEBBING OR DEVICE. DO NOT USE SOLVENTS OR ABRASIVES WHEN CLEANING QUICKFLIGHT COMPONENTS, WEBBINGS, AND ASSOCIATED EQUIPMENT.

Improper Operation

THE FOLLOWING SCENARIOS ARE NOT ALLOWABLE, MAY CAUSE DEVICE DAMAGE, AND CREATE A DANGEROUS SCENARIO WHICH COULD RESULT IN EQUIPMENT DAMAGE, SERIOUS INJURY, OR DEATH.

- Pulling webbing out of the device before descent for additional free fall.
- Descending from the platform with a running start.
- Descending on the device with a higher weight than the device maximum.
- Using multiple devices simultaneously to accommodate weights above the maximum.
- Lowering more than one participant at a time. The QuickFlight Free Fall Device is designed to lower only one participant at a time.

MANUFACTURER'S DETAILS

ADDRESS

Head Rush Technologies
1835 38th Street, Suite C
Boulder, CO 80301
USA

CONTACT DETAILS

+1-720-565-6885
www.headrushtech.com
info@headrushtech.com

TAKE FLIGHT

REGISTER YOUR DEVICE

Get automatic updates on recertification and product information – visit ***headrushtech.com/register***

ANNUAL RECERTIFICATION IS REQUIRED

Please keep the shipping box for your device. For instructions on annual recertification, visit ***headrushtech.com/recertification***

+1-720-565-6885 **headrushtech.com** **info@headrushtech.com**